Mod. SC-AUT - BT

Technical data of the hinged and sliding door

All the hinged doors and sliding door produced by A.E.G. SRL are insulated.
The insulation is provided through polyurethane.
The doors leaf are characterized by and made up of:
3 different thicknesses: 86 mm, 126 mm, 150 mm, with

- edge border in aluminium or SS and the facing available in pre-painted metal, in stainless steel or fibreglass external faces.
- Core made of rigid oven baked foam polyurethane with the following structural characteristics and behaviour:
  density Kg/m³ 40-42
  Closed cells content % > 95

Thermal conductivity λ 0,020 - 0,023 w/mk
Insulating capacity:
k thickness 86 mm 0,24 w/m2k
k thickness 126 mm 0,16 w/m2k
k thickness 150 mm 0,14 w/m2k

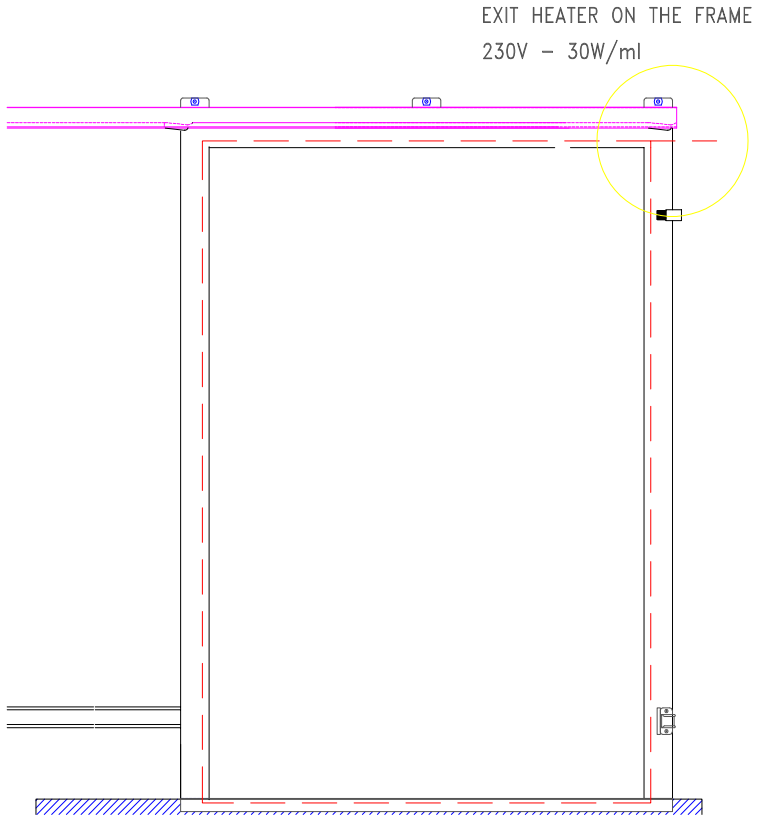

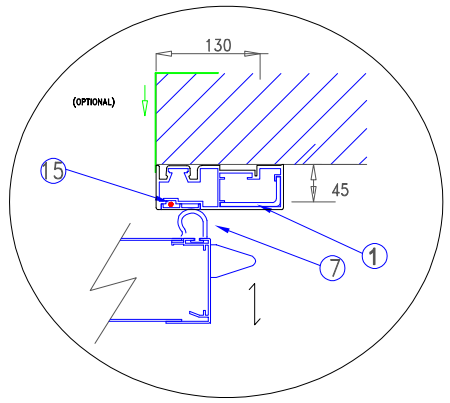

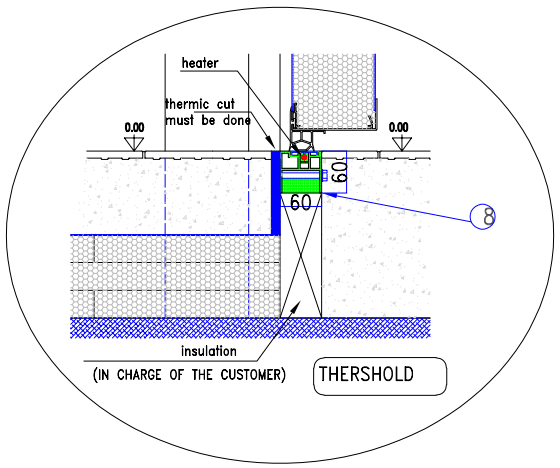

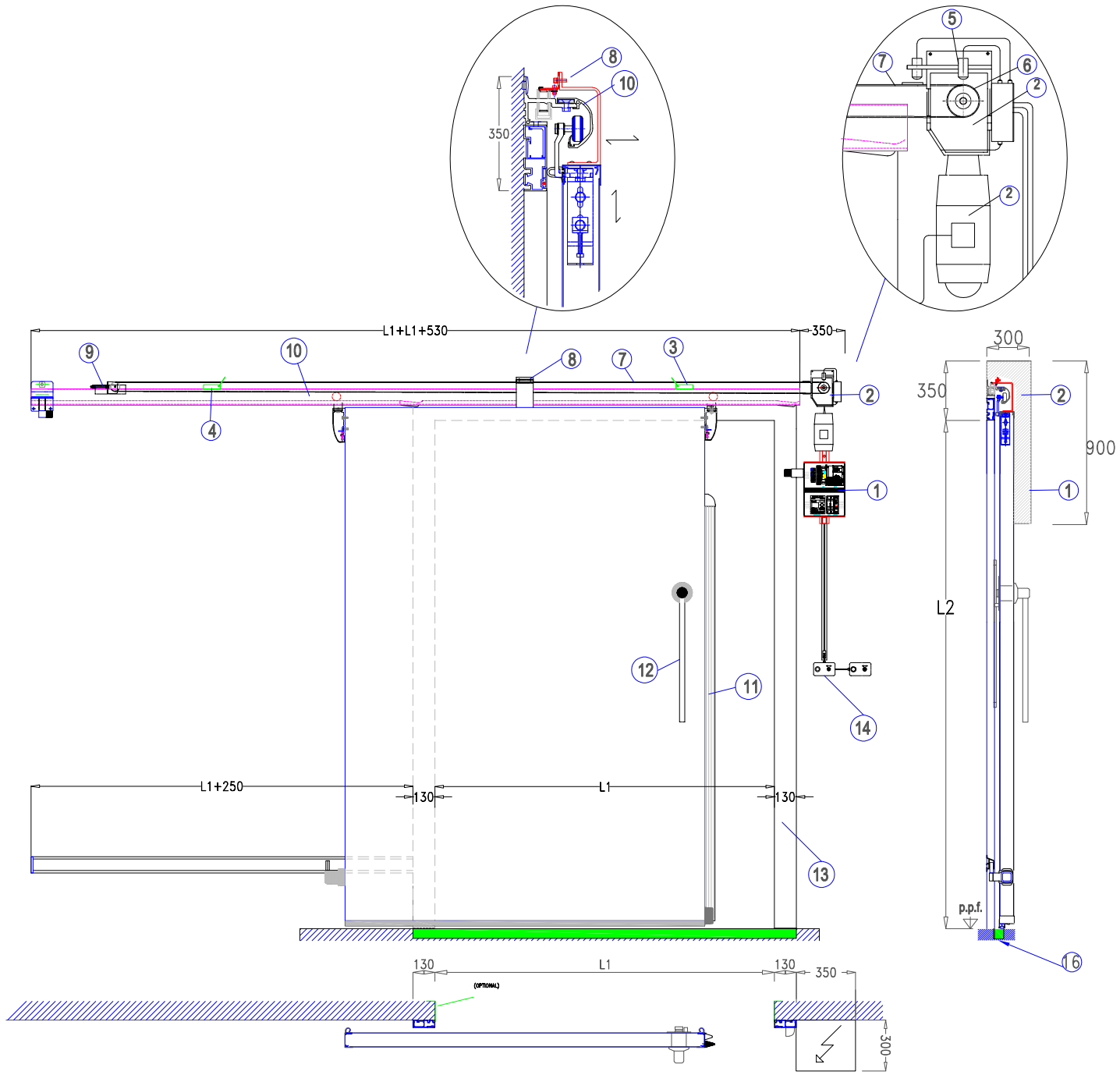

1. CONTROL BOX
2. SPEED REDUCER
3. INDUCTOR CLOSING SENSOR
4. INDUCTOR OPENING SENSOR
5. INDUCTOR SPEED REDUCER SENSOR
6. DRIVE SHAFT
7. TOOTHED BELT
8. DRIVE GEAR
9. BELT RETOURN AND TENSION GEAR
10. TOP SLIDING GUIDE
11. SAFETY BARRIER
12. INNER / OUTER HANDLE
13. COUNTER FRAME
14. BUTTON BOX
15. HEATER
16. THERSHOLD

sevenfrigo FRIGO DOORS
doors and cold rooms - By
A.E.G. s.r.l.
Ponte S. Giovanni - via della Tecnica, 44
06135 - Perugia - ITALY
Tel. +30 - 075 - 5997648 / info@sevenfrigo.eu